ARCS Wide/Focus

user manual (EN)

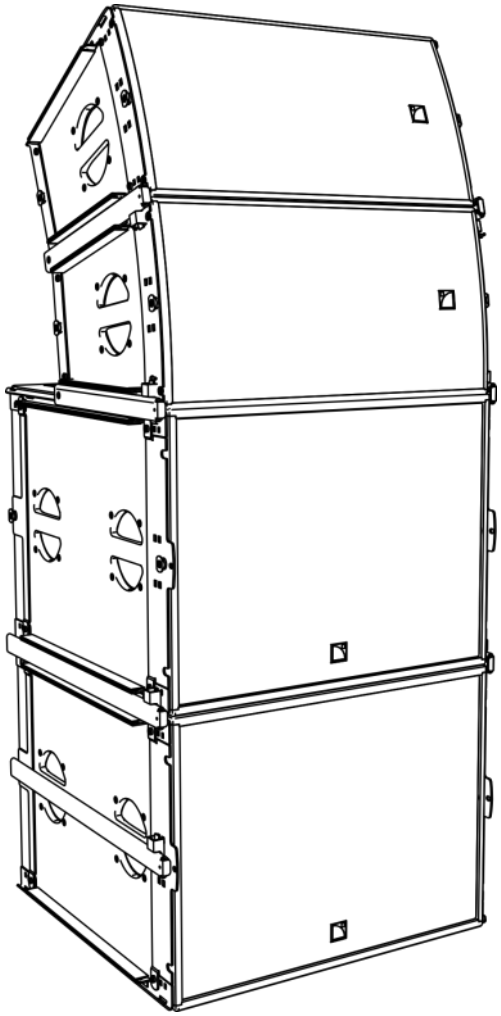

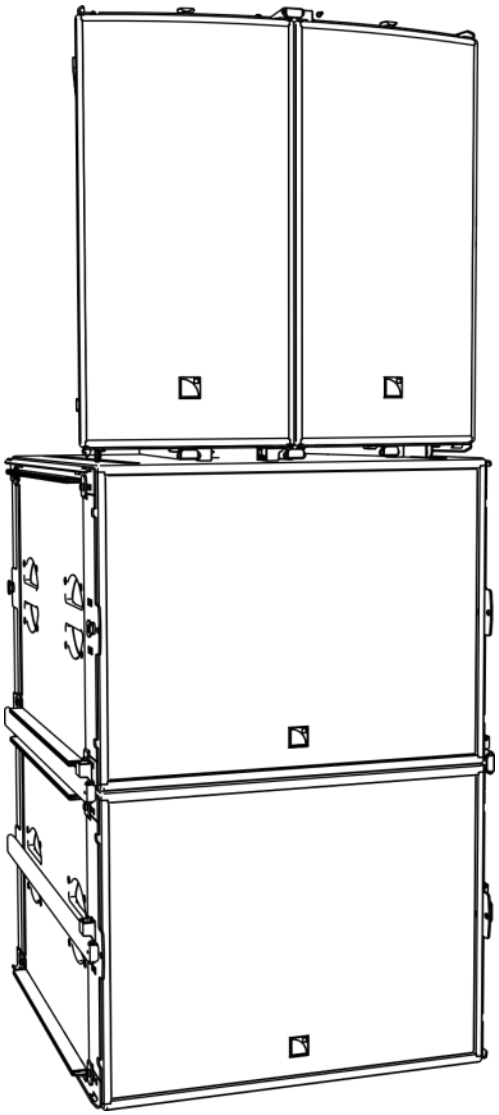

Document reference: ARCSWIFO_UM_EN_3.0

Distribution date: April 11, 2017

SAFETY INSTRUCTIONS

1. **Read this manual**
2. **Follow all SAFETY INSTRUCTIONS as well as DANGER and OBLIGATION warnings**
3. **Never incorporate equipment or accessories not approved by L-ACOUSTICS®**
4. **Read all the related PRODUCT INFORMATION documents before exploiting the system**
   The product information document is included in the shipping carton of the related system component.
5. **Read the RIGGING MANUAL before installing the system**
   Use the rigging accessories described in the rigging manual and follow the associated procedures
6. **Beware of sound levels**
   Do not stay within close proximity of loudspeakers in operation and consider wearing earplugs.
   Loudspeaker systems are capable of producing very high sound pressure levels (SPL) which can instantaneously lead to permanent hearing damage to performers, production crew and audience members. Hearing damage can also occur with prolonged exposure to sound: 8 h at 90 dB(A), 30 min at 110 dB(A), less than 4 min at 130 dB(A).

SYMBOLS

The following symbols are used in this document:

DANGER
This symbol indicates a potential risk of harm to an individual or damage to the product.
It can also notify the user about instructions that must be strictly followed to ensure safe installation or operation of the product.

OBLIGATION
This symbol notifies the user about instructions that must be strictly followed to ensure proper installation or operation of the product.

INFORMATION
This symbol notifies the user about complementary information or optional instructions.

CONTENTS

ARCS® WIDE / FOCUS SYSTEM

The ARCS® WIDE and ARCS® FOCUS systems are based on two constant curvature enclosures ensuring distinct directivity pattern and SPL capabilities. Intended for medium-throw applications in rental productions and fixed installations, these line sources deliver remarkable acoustic properties and unmatched versatility for applications including FOH L/R systems, central clusters, side-fill monitors, distributed systems and complementary fills.

The main systems components consist of the following:

- ARCS® WIDE (H x V: 30° x 90°) element, wide coverage, operating from 55 Hz to 20 kHz;
- ARCS® FOCUS (H x V: 15° x 90°) element, focused energy, operating from 55 Hz to 20 kHz;
- SB18m low frequency extension, operating down to 32 Hz;
- LA4, LA4X or LA8 amplified controllers.

The ARCS® WIDE or ARCS® FOCUS line sources provide high SPL with perfect acoustic coupling, a solid LF performance and constant tonal balance over distance. Both systems can be deployed either as a horizontal array or as a vertical array.

In the coupling plane, the ARCS® WIDE and ARCS® FOCUS yield a razor-sharp directivity pattern, particularly valuable to sector audience fields while avoiding reflective surfaces. In the other plane, both systems provide a 90° smooth symmetric directivity pattern.

The ARCS® WIDE is suited to achieve an extensive coverage with few elements, offering a remarkably compact array preserving sightlines. The total coverage angle of an ARCS® WIDE line source is proportional to the number N of enclosures in the array, i.e. N x 30°.

The ARCS® FOCUS line source focuses the same acoustic energy within half of the coverage angle, i.e. N x 15°. The ARCS® FOCUS is therefore suited to achieve a narrower coverage, offering a higher SPL with a more extended throw than its sibling.

The ARCS® WIDE and ARCS® FOCUS can also be deployed in "WIFO" hybrid arrays for complex audience geometries. The dual directivity pattern and the various system configurations offered to the sound designer and system engineer allow a high level of creative freedom. Before installation, all these configurations can be acoustically and mechanically modeled with the SOUNDVISION 3D simulation software.

The amplified controllers offer an advanced and precise drive system for the ARCS® WIDE and ARCS® FOCUS enclosures. Both can be driven with the same preset. All L-ACOUSTICS amplified controllers feature the L-DRIVE, a thermal and over-excursion protection circuit.

Up to 253 LA8 amplified controllers can be connected together via the Ethernet-based L-NET protocol. The LA NETWORK MANAGER software allows online remote control and monitoring of all the connected units, via a user-friendly and intuitive graphic interface, and features the Array Morphing EQ. This exclusive tool allows the engineer to quickly adjust the tonal balance of the system to reach a reference curve or to ensure consistency of the sonic signature.

1 SYSTEM COMPONENTS

The system approach developed by L-ACOUSTICS® consists in offering a global solution that guarantees the highest and most predictable level of performance at any step of loudspeaker system deployment: modeling, installation, and operation. A complete L-ACOUSTICS® system includes enclosures, amplified controllers, cables, rigging system and software applications.

1.1 Loudspeaker enclosure

ARCS® WIDE	Full-range (55Hz – 20kHz), 2-way passive, constant curvature WST® line source, 90° x 30°
ARCS® FOCUS	Full-range (55Hz – 20kHz), 2-way passive, constant curvature WST® line source, 90° x 15°
SB18m	High power subwoofer (down to 32Hz)

Loudspeaker system design
Sound design aspects are beyond the scope of this document. However, the various applications of the system will be based on the loudspeaker configurations presented in this document.

1.2 Powering and driving system

LA4, LA4X or LA8	Amplified controllers with DSP, preset library and networking capabilities

Operating instructions
Refer to the **LA4, LA4X, LA8** or **LA-RAK user manuals.**

1.3 Loudspeaker cables

DO cables (DO.7, DO10, DO25)	8-point PA-COM® loudspeaker cables (4 mm² section). Respective lengths of 0.7 m/2.3 ft, 10 m/32.8 ft, and 25 m/82 ft.
DOSUB-LA8	Breakout cable for four passive enclosures. 8-point PA-COM® to 4 × 2-point SpeakON® (4 mm² section).
SP cables (SP.7, SP5, SP10, SP25)	4-point SpeakON® loudspeaker cables (4 mm² section). Respective lengths of 0.7 m/2.3 ft, 5 m/16.4 ft, 10 m/32.8 ft and 25 m/82 ft.
SP-Y1	Breakout cable for two passive enclosures. 4-point SpeakON® to 2 × 2-point SpeakON® (2.5 mm² section). Provided with CC4FP adapter.

Information about the connection of the enclosures to the LA amplifiers is given in this document.
Refer to the **LA4, LA4X**, **LA8** or **LA-RAK user manuals** for detailed instructions about the whole cabling scheme, including modulation cables and network.

1.4 Rigging element

Rigging elements or procedures are not presented in this document.
Refer to the **ARCS® WIDE/FOCUS rigging manual**.

1.5 Software application

SOUNDVISION	Proprietary acoustical and mechanical 3D modeling software.
LA NETWORK MANAGER	Remote control and monitoring of amplified controllers

Using L-ACOUSTICS® software
Refer to the **SOUNDVISION user manual** and the **LA NETWORK MANAGER tutorial**.

ARCS® FOCUS

SB18m

ARCS® WIDE

LA4X

LA4

LA8

SPY1

SP7

SP5

SP10

SP25

DO3WFILL

DO10

DOSUB-LA8

DO25

DO.7

Soundvision

LA Network Manager

ARCS® WIDE/FOCUS system components (excluding rigging elements and modulation cables)

2 LOUDSPEAKER CONFIGURATIONS

2.1 Line source

Deployed as a standalone line source, an ARCS WIDE/FOCUS system operates over the nominal bandwidth of the ARCS WIDE/FOCUS enclosure.

The [ARCS_WIFO] preset allows for a reference frequency response in medium throw applications.

This configuration is driven by the LA4, LA4X or LA8 amplified controller.

Standalone ARCS WIDE/FOCUS line source

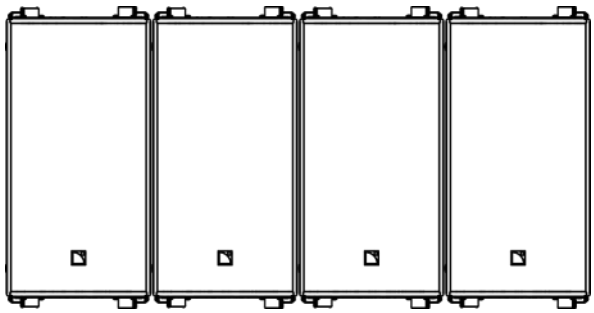

Horizontal

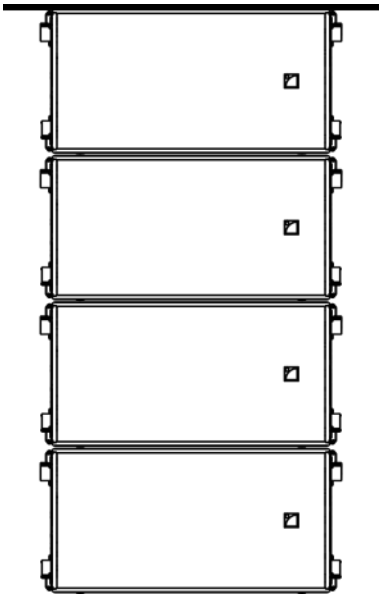

Vertical

Frequency range (-10 dB)	Enclosure	[PRESET]
55 Hz – 20 kHz	ARCS® WIDE / FOCUS	▶ **[ARCS_WIFO]**

2.2 Line source with low-frequency element

In this configuration – an ARCS® WIDE/FOCUS line source deployed with SB18m subwoofers – the system bandwidth is extended in the low end.

The [ARCS_WIFO] preset allows for a reference frequency response in medium throw applications.

The [SB18_60] preset provides the subwoofer enclosures with an upper frequency limit at 60 Hz for an optimal frequency coupling with the ARCS® WIDE/FOCUS line source.

This configuration is driven by the LA4, LA4X or LA8 amplified controllers.

ARCS WIDE/FOCUS line source + SB18m

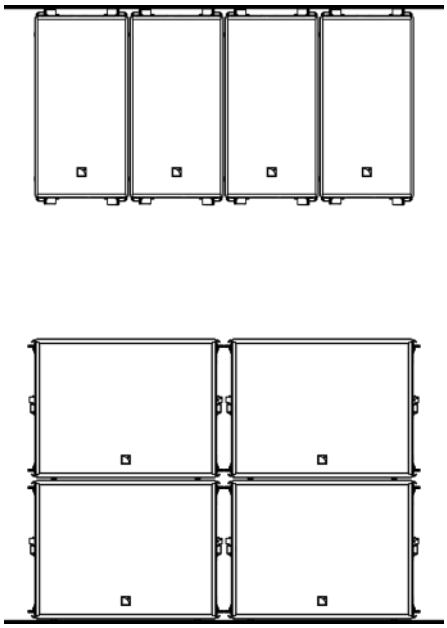

Flown horizontal ARCS WIDE/FOCUS with ground-stacked SB18m

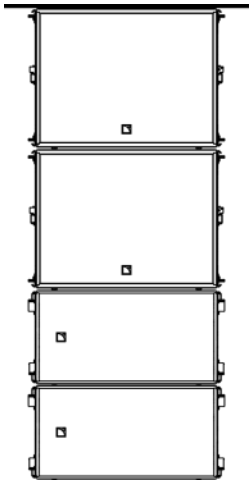

Flown

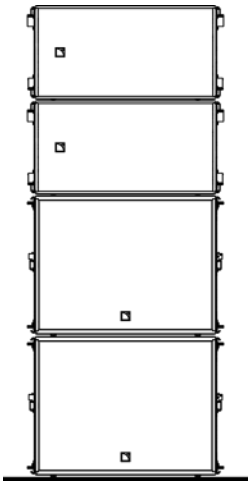

Stacked

Mixed arrays

Enclosure	[PRESET]
ARCS® WIDE/FOCUS	▶ **[ARCS_WIFO]**
SB18m	▶ **[SB18_60]**

Frequency range (-10dB)	Recommended ratio
32 Hz – 20 kHz	1 ARCS® WIDE / FOCUS: 1 SB18m

2.3 Line source element

In this configuration – a single ARCS® WIDE/FOCUS enclosure without complementary subwoofers – the system operates over the nominal bandwidth of the enclosure.

The [ARCS_WIFO_FI] preset allows for a reference frequency response in short throw applications.

This configuration is driven by the LA4, LA4X or LA8 amplified controller.

Single ARCS WIDE/FOCUS enclosure

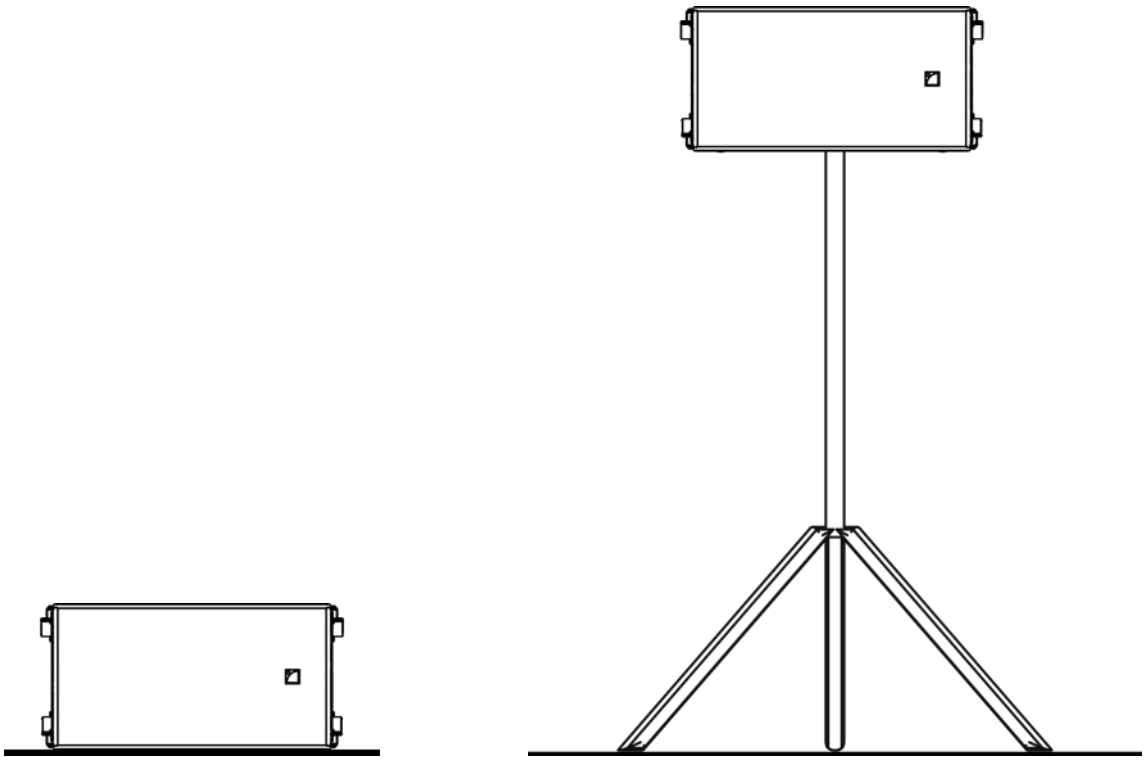

Frequency range (-10 dB)	Enclosure	[PRESET]
55 Hz – 20 kHz	1 ARCS® WIDE / FOCUS: 1 SB18m	▶ **[ARCS_WIFO_FI]**

2.4 Line source with low-frequency element

In this configuration – a single ARCS® WIDE/FOCUS enclosure deployed with an SB18m subwoofer – the system bandwidth is extended in the low end.

The [ARCS_WIFO_FI] preset allows for a reference frequency response in short throw applications.

The [SB18_60] preset provides the subwoofer enclosures with an upper frequency limit at 60 Hz for an optimal frequency coupling with the ARCS® WIDE/FOCUS element.

This configuration is driven by the LA4, LA4X or LA8 amplified controllers.

Single ARCS WIDE/FOCUS + SB18m

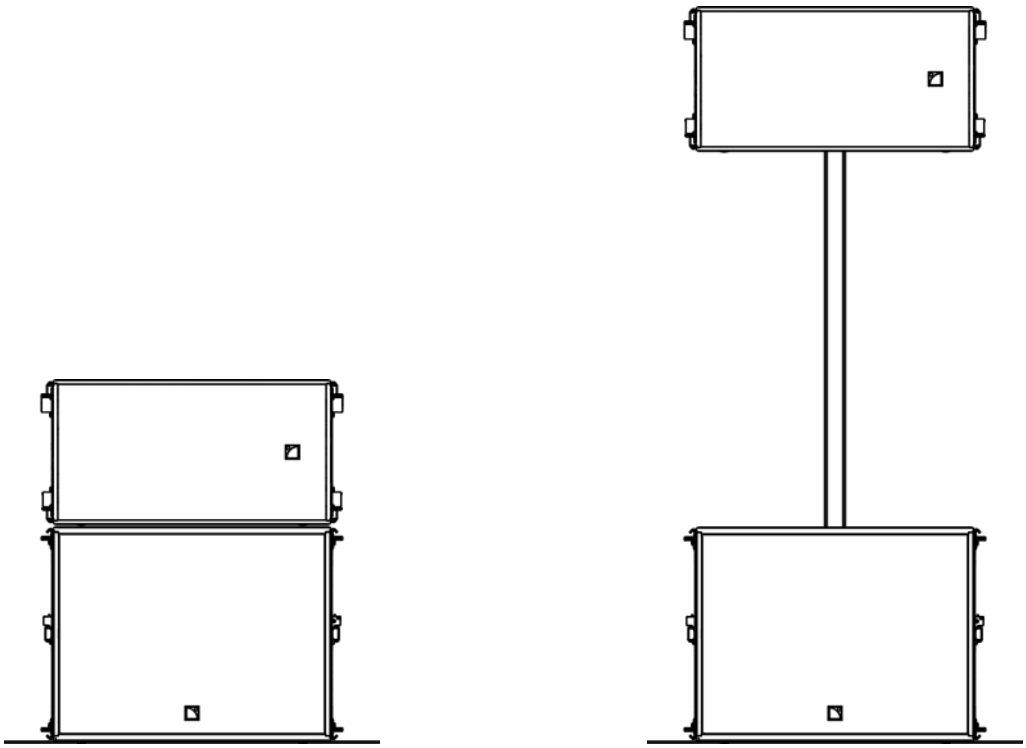

Enclosure	[PRESET]
ARCS® WIDE/FOCUS	▶ **[ARCS_WIFO_FI]**
SB18m	▶ **[SB18_60]**

Frequency range (-10dB)	Recommended ratio
32 Hz – 20 kHz	1 ARCS® WIDE / FOCUS: 1 SB18m

3 LOUDSPEAKER CONNECTION

3.1 Connectors

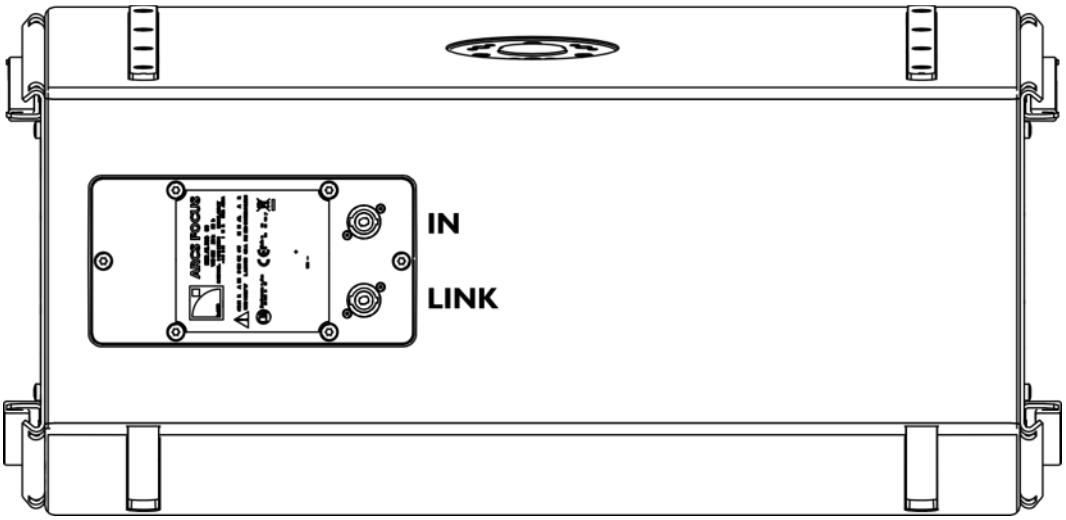

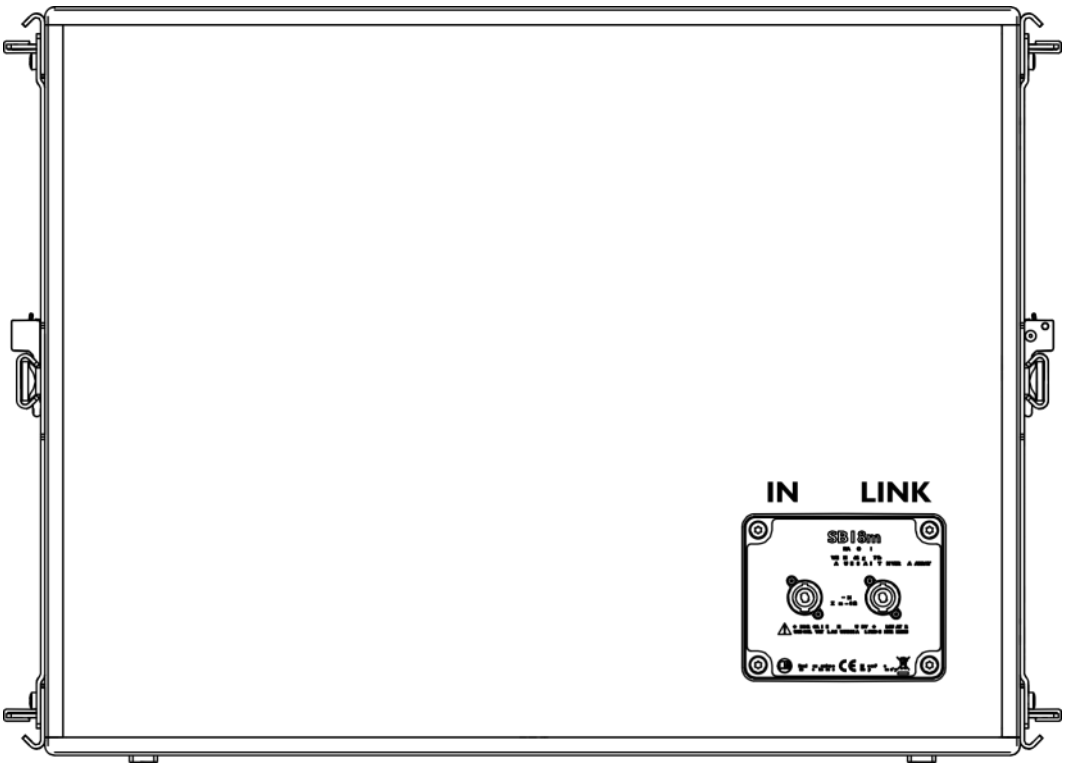

Internal pinout for L-ACOUSTICS® ARCS WIDE/FOCUS and SB18m

SpeakON® points	1+	1 -	2 +	2 -
Transducer connectors	+	-	Not used	Not used

3.2 Connection to LA4 / LA4X

Maximum number of enclosures per LA4 / LA4X
One ARCS® WIDE/FOCUS or one SB18m can be connected to each output channel on the LA4 / LA4X. Therefore, a single LA4 / LA4X amplified controller can drive up to:

- 4 × ARCS® WIDE/FOCUS or
- 4 × SB18m or
- 3 × ARCS® WIDE/FOCUS and 1 × SB18m.

Cardioid configuration
Connect the reversed subwoofer(s) to OUT 1 to use the cardioid preset.

Impedance load
8 Ω for 1 enclosure.

Option A

▶ Use **SP cables** (SP.7, SP5, SP10 or SP25) to connect first enclosures to the four LA4 / LA4X output channels.

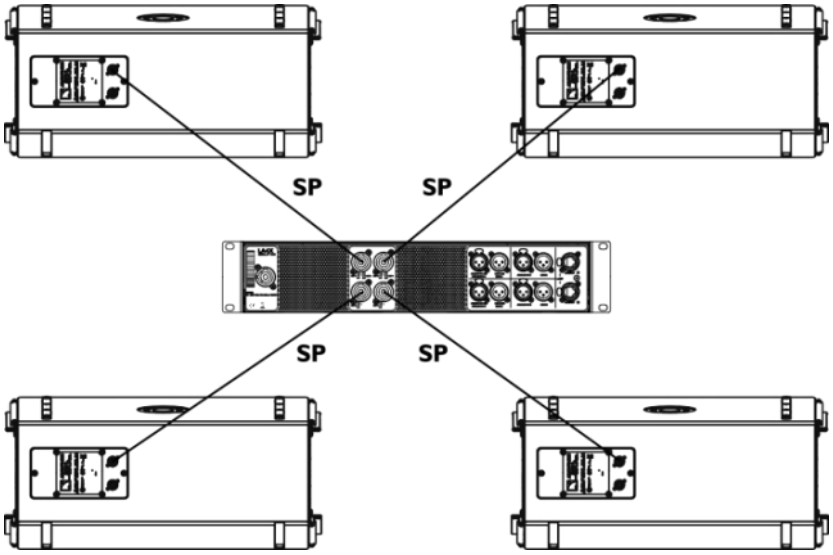

LA4 / LA4X option A maximum configuration with ARCS® WIDE/FOCUS

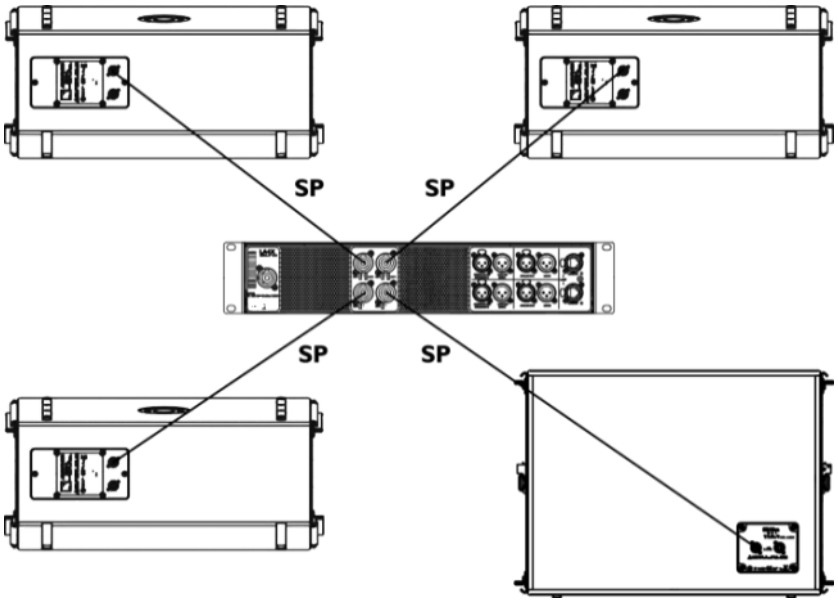

LA4 / LA4X option A maximum configuration with ARCS® WIDE/FOCUS + SB18m

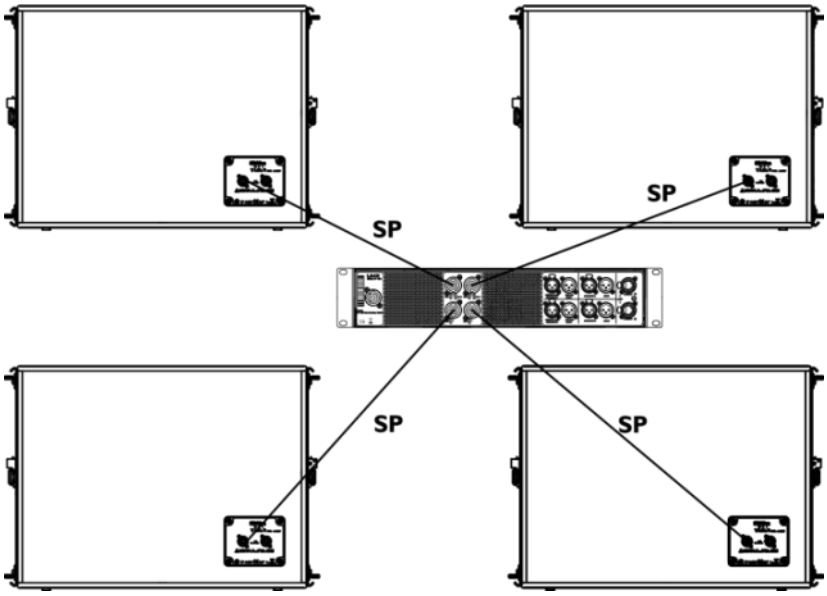

LA4 / LA4X option A maximum configuration with SB18m

Option B

▶ Connect an **SP cable** (SP.7, SP5, SP10 or SP25) to the OUT1/OUT2 and OUT3/OUT4 connectors of the LA4 / LA4X.
▶ Use a **CC4FP adapter** to connect an **SP-Y1 cable** and separate the two output channels.

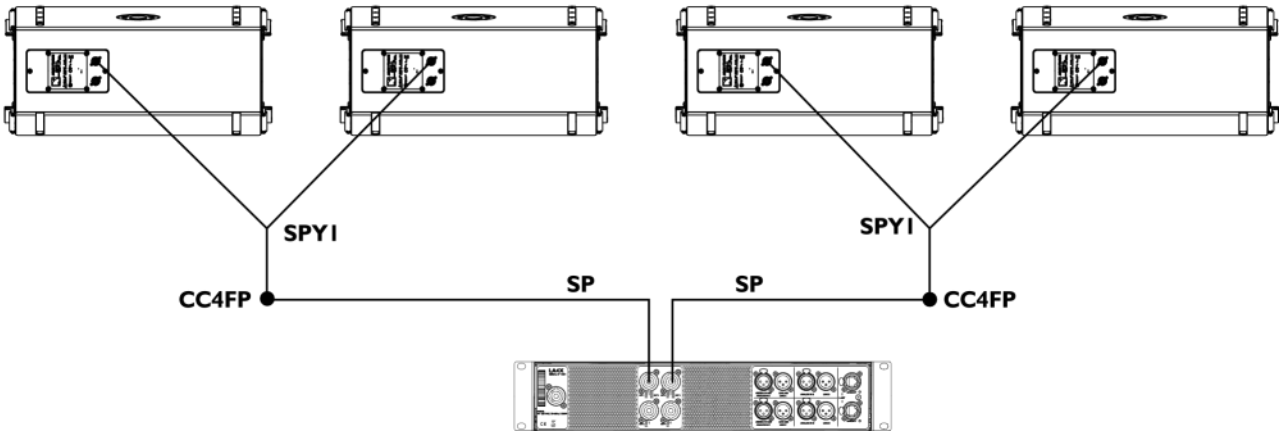

LA4 / LA4X option B maximum configuration with ARCS® WIDE/FOCUS

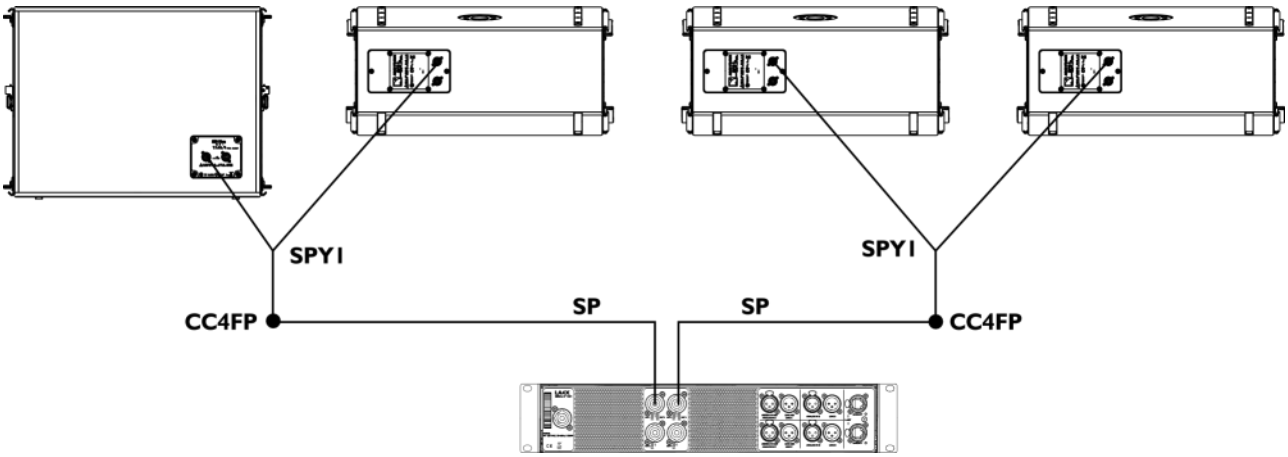

LA4 / LA4X option B maximum configuration with ARCS® WIDE/FOCUS + SB18m

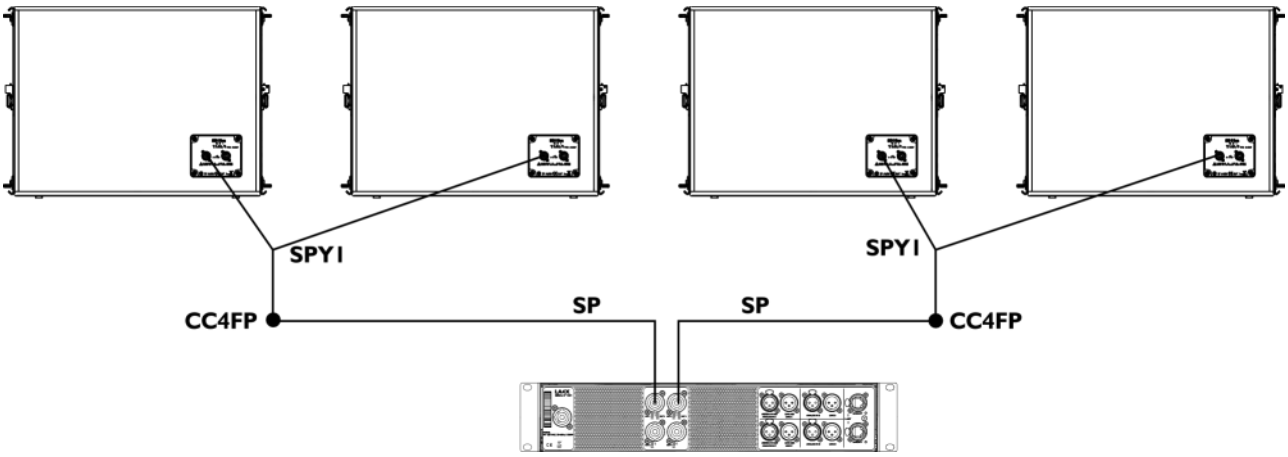

LA4 / LA4X option B maximum configuration with SB18m

3.3 Connection to LA8

Maximum number of enclosures per LA8
Two ARCS WIDE/FOCUS or two SB18m can be connected in parallel to each output channel on the LA8. Therefore, a single LA8 amplified controller can drive up to:

- 8 × ARCS® WIDE/FOCUS or
- 8 × SB18m or
- 4 × ARCS® WIDE/FOCUS and 4 × SB18m.

Cardioid configuration
Connect the reversed subwoofer(s) to OUT 1 to use the cardioid preset.

Impedance load
8 Ω for 1 enclosure, 4 Ω for 2 enclosures.

Option A

▶ Connect a **DO cable** (DO.7, DO10 or DO25) to the LA8 PA-COM® connector
▶ Use the **DOSUB-LA8** to separate the four output channels.
▶ If necessary, use **SP cables** to connect additional similar enclosures in parallel with the first ones.

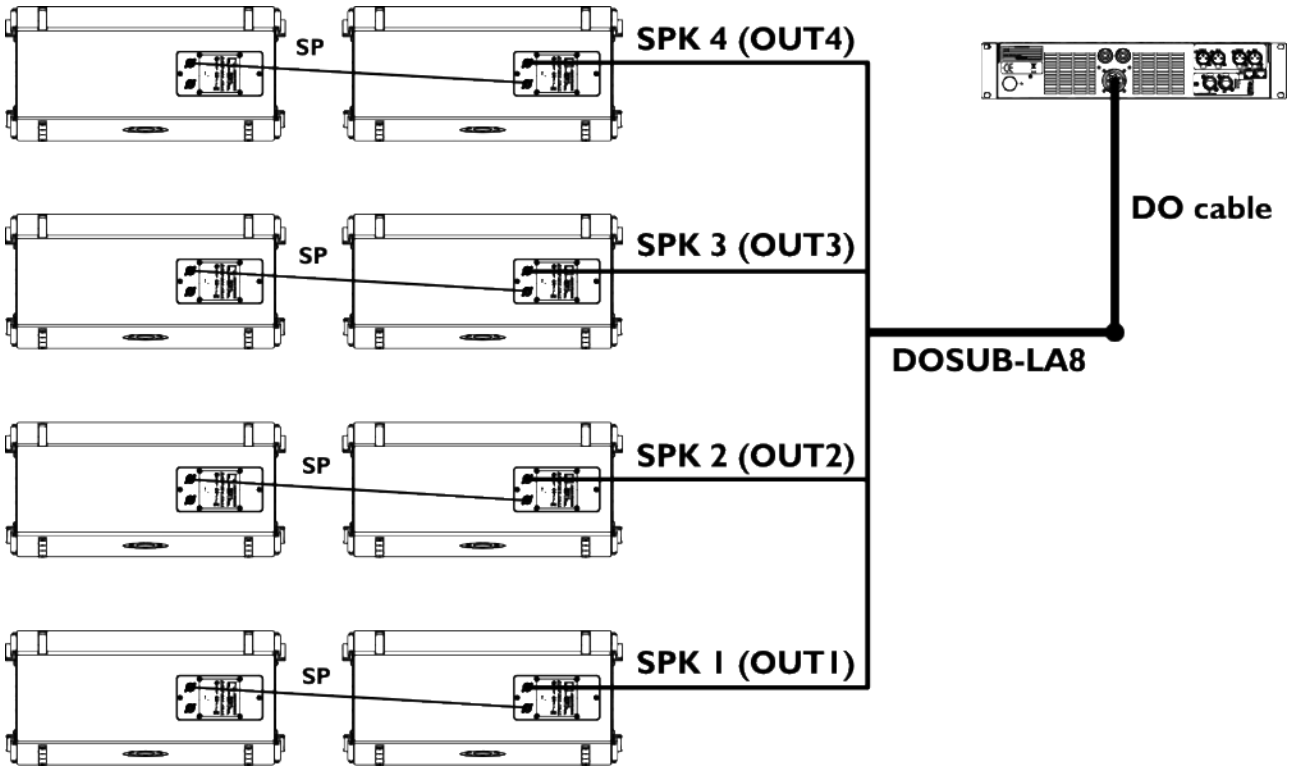

LA8 option A maximum configuration with ARCS® WIDE/FOCUS

Corresponding DOSUB-LA8 SpeakON® points and LA8 output channels:

SPK1 = OUT 1	SPK3 = OUT 3
SPK2 = OUT 2	SPK4 = OUT 4

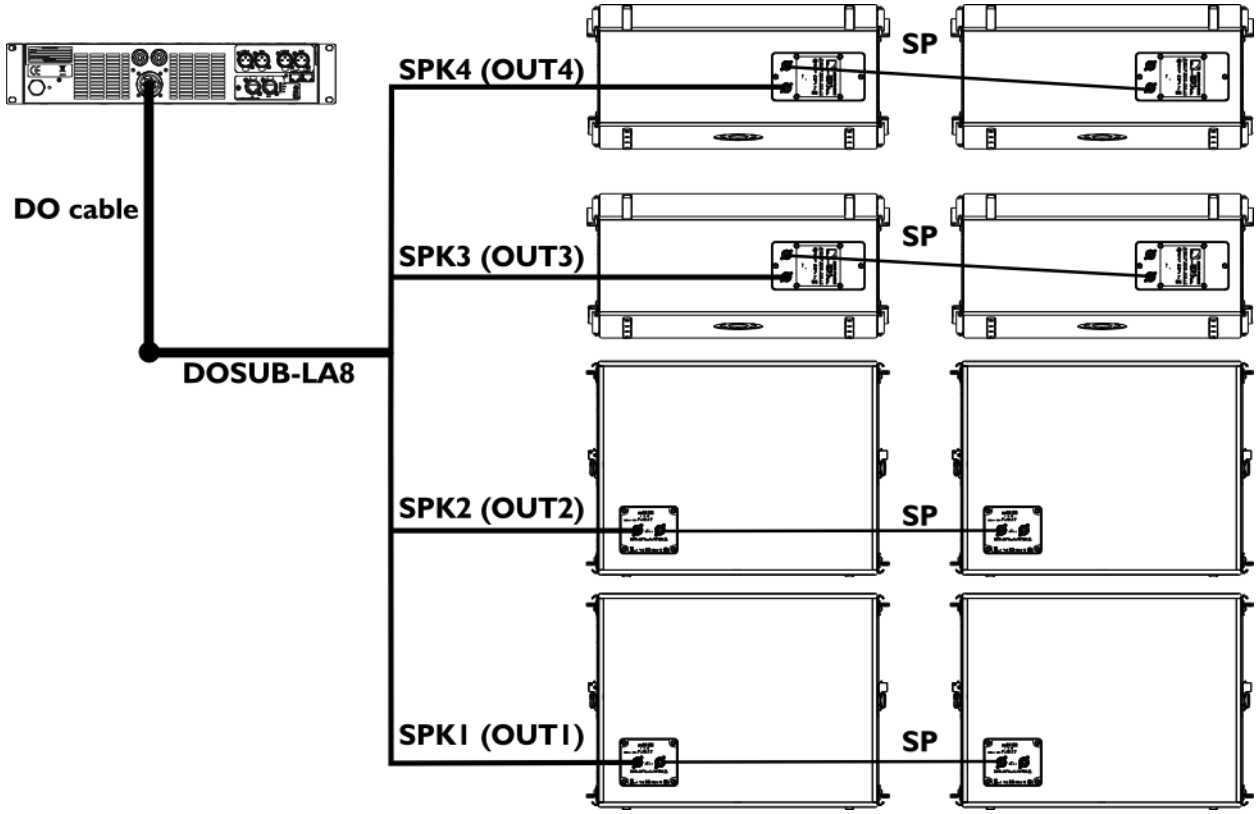

LA8 option A with ARCS® WIDE/FOCUS + SB18m

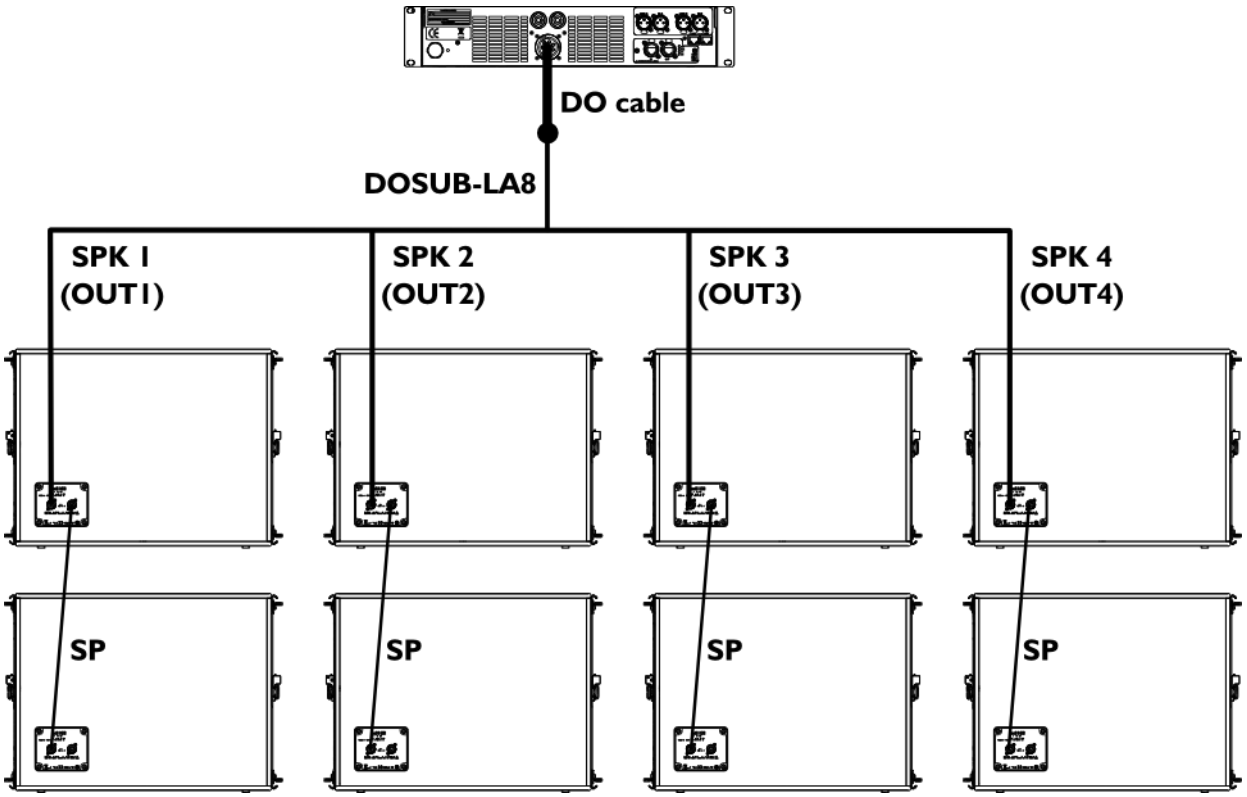

LA8 option A with SB18m

Option B

▶ Connect an **SP** cable (SP.7, SP5, SP10 or SP25) to the OUT1/OUT2 and OUT3/OUT4 LA8 SpeakON® connectors.
▶ Use a **CC4FP adapter** to connect an **SP-Y1** cable and separate the two output channels.
▶ If necessary, use **SP cables** to connect additional similar enclosures in parallel with the first ones.

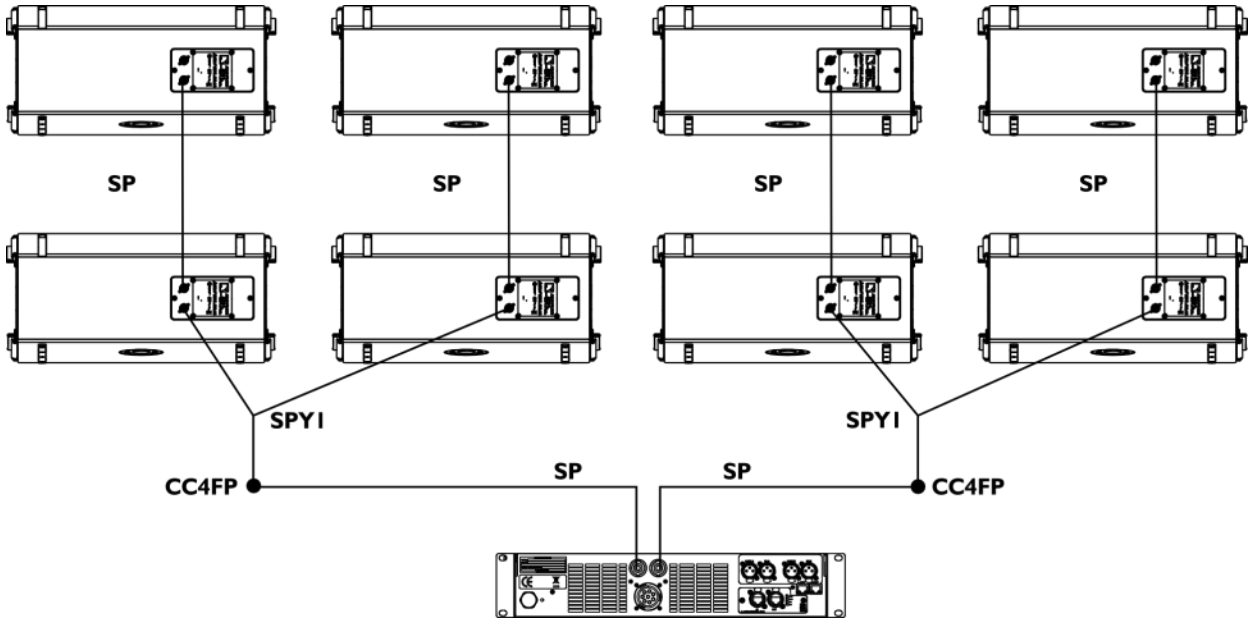

LA8 option B maximum configuration with ARCS® WIDE/FOCUS

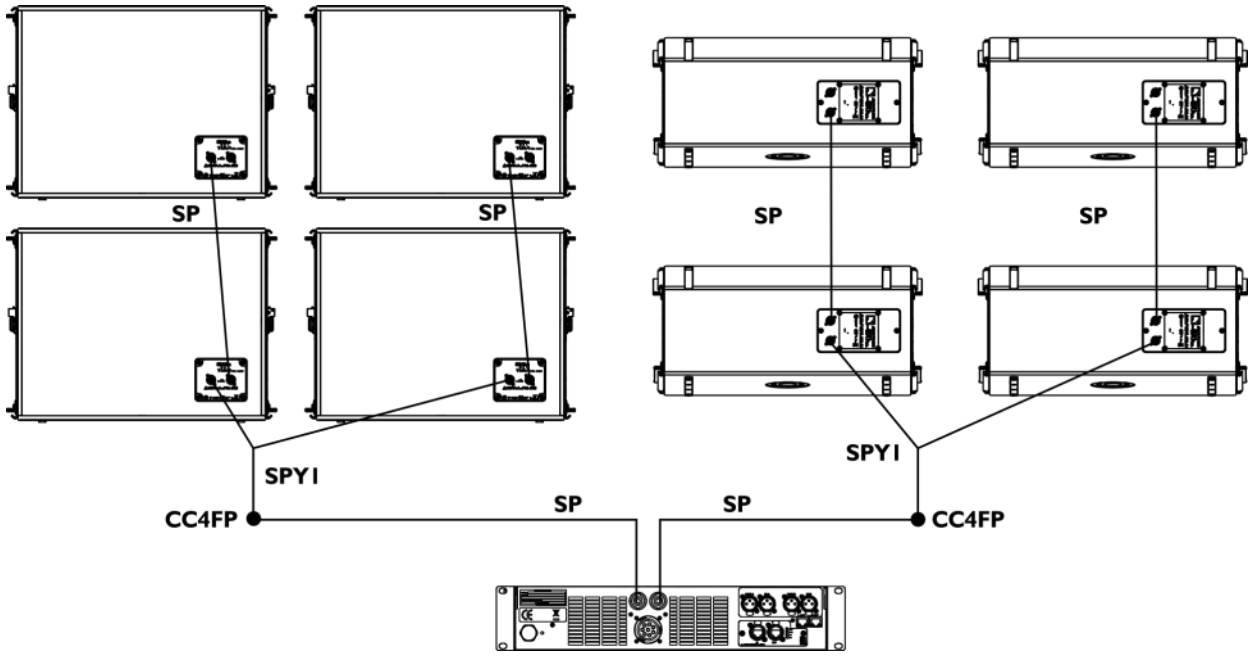

LA8 option B with ARCS® WIDE/FOCUS + SB18m

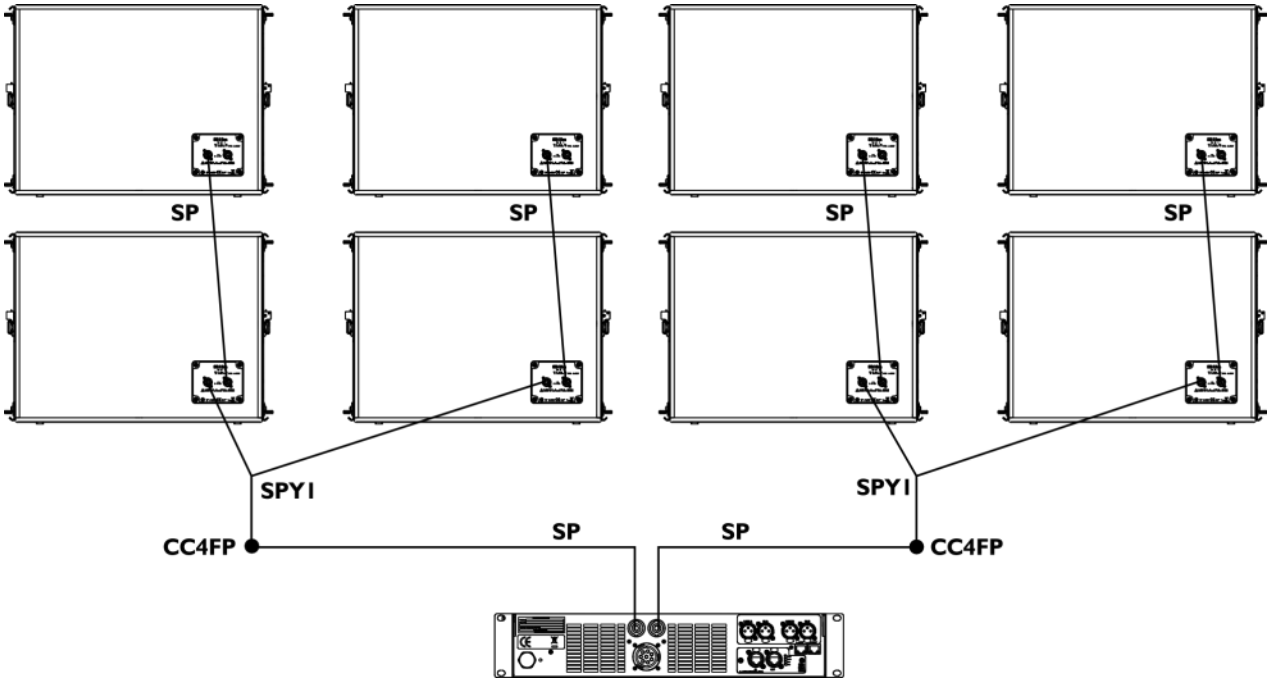

LA8 option A maximum configuration with SB18m

APPENDIX A PRESET DESCRIPTION

[ARCS_WIFO] and [ARCS_WIFO_FI]

The [ARCS_WIFO] preset allows for a reference frequency response in medium throw applications.
The [ARCS_WIFO_FI] preset allows for a reference frequency response in short throw applications.

Loudspeaker elements	Amplifier outputs	Channels	Default parameters				
			Routing	Gain	Delay	Polarity	Mute
ARCS WIDE/FOCUS	OUT 1	PA	IN A	0 dB	0 ms	+	ON
ARCS WIDE/FOCUS	OUT 2	PA	IN A	0 dB	0 ms	+	ON
ARCS WIDE/FOCUS	OUT 3	PA	IN B	0 dB	0 ms	+	ON
ARCS WIDE/FOCUS	OUT 4	PA	IN B	0 dB	0 ms	+	ON

[SB18_60]

The [SB18_60] preset provides the subwoofer enclosures with an upper frequency limit at 60 Hz.

Loudspeaker elements	Amplifier outputs	Channels	Default parameters				
			Routing	Gain	Delay	Polarity	Mute
SB18	OUT 1	SB	IN A	0 dB	0 ms	+	ON
SB18	OUT 2	SB	IN A	0 dB	0 ms	+	ON
SB18	OUT 3	SB	IN B	0 dB	0 ms	+	ON
SB18	OUT 4	SB	IN B	0 dB	0 ms	+	ON

[SB18_60_C]

The [SB18_60_C] preset provides the subwoofer enclosures with an upper frequency limit at 60 Hz.
It features optimized delay settings for SB18 arrays in cardioid configuration.

Loudspeaker elements	Amplifier outputs	Channels	Default parameters				
			Routing	Gain	Delay	Polarity	Mute
Reversed SB18	OUT 1	SR	IN A	0 dB	0 ms	+	ON
SB18	OUT 2	SB					ON
SB18	OUT 3	SB					ON
SB18	OUT 4	SB					ON

APPENDIX B RECOMMANDATION FOR SPEAKER CABLES

Cable quality and resistance
Only use high-quality fully insulated speaker cables made of stranded copper wire.
Use cables of gauge offering low resistance per unit length and keep the cables as short as possible.

The following table provides the recommended maximum length depending on the cable cross-section and on the impedance load connected to the amplifier.

			Recommended maximum length					
Cable cross-section			**8 Ω load**		**4 Ω load**		**2.7 Ω load**	
mm^2	**SWG**	**AWG**	**m**	**ft**	**m**	**ft**	**m**	**ft**
2.5	15	13	30	100	15	50	10	33
4	13	11	50	160	25	80	17	53
6	11	9	74	240	37	120	25	80
10	9	7	120	390	60	195	40	130

APPENDIX C SPECIFICATIONS

ARCS FOCUS

Description	2-way passive enclosure, amplified by LA4 / LA4X / LA8 / LA12X
Usable bandwidth (-10 dB)	55 Hz - 20 kHz ([ARCS_WIFO] preset)
Maximum SPL[1]	139 dB ([ARCS_WIFO] preset)
Coverage angle (-6 dB)	15° × 90°
Transducers	LF: 1 × 12", weather-resistant, bass-reflex.
	HF: 1 × 3", diaphragm compression driver, DOSC® waveguide.
Nominal impedance	8 Ω
RMS power handling	450 W
Connectors	IN: 1 × 4-point SpeakOn® LINK: 4-point SpeakOn®
Rigging components	Rigging rails and WIFORIG coupling bars.
Dimensions	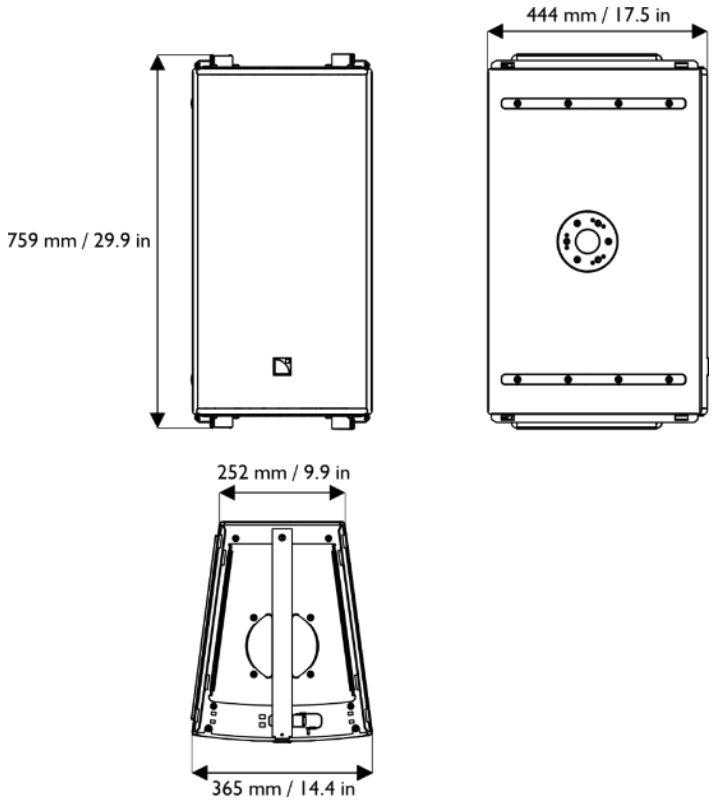

Physical data	Weight (net):	38 kg / 84 lb
	Cabinet:	Baltic birch plywood.
	Finish:	Dark Grey brown (Pantone 426C) Pure white (RAL 9010®) Custom RAL code on special order
	Front:	Steel grill with anti-corrosion coating, Airnet® fabric
	Protection Rating:	IP55
	Rigging components:	High strength steel with anti-corrosion coating

[1] Peak level measured at 1 m under free field conditions using pink noise with crest factor 4 (preset specified in brackets).

ARCS WIDE

Description	2-way passive enclosure, amplified by LA4 / LA4X / LA8 / LA12X
Usable bandwidth (-10 dB)	55 Hz - 20 kHz ([ARCS_WIFO] preset)
Maximum SPL[1]	137 dB ([ARCS_WIFO] preset)
Coverage angle (-6 dB)	30° × 90°
Transducers	LF 1 × 12", weather-resistant, bass-reflex.
	HF 1 × 3", diaphragm compression driver, DOSC® waveguide.
Nominal impedance	8 Ω
RMS power handling	450 W
Connectors	IN: 1 × 4-point SpeakOn® LINK: 4-point SpeakOn®
Rigging components	Rigging rails and WIFORIG coupling bars.
Dimensions	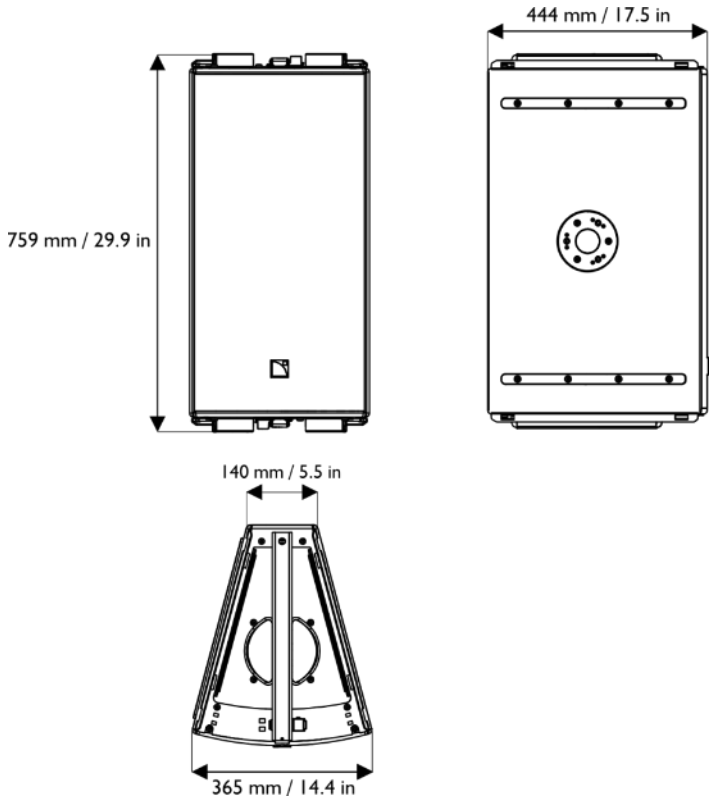

Physical data	**Weight (net):**	36 kg / 79 lb
	Cabinet:	Baltic birch plywood.
	Finish:	Dark Grey brown (Pantone 426C) Pure white (RAL 9010®) Custom RAL code on special order
	Front:	Steel grill with anti-corrosion coating, Airnet® fabric
	Protection Rating:	IP55
	Rigging components:	High strength steel with anti-corrosion coating

[1] Peak level measured at 1 m under free field conditions using pink noise with crest factor 4 (preset specified in brackets).

SB18m

Description	Subwoofer enclosure, amplified by LA4 / LA4X / LA8 / LA12X	
Low frequency limit (-10 dB)	32 Hz ([SB18_100] preset)	
Maximum SPL[1]	138 dB ([SB18_100] preset)	
RMS power handling	700 W	
Transducers	1 × 18" weather-resistant, bass-reflex	
Nominal impedance	8 Ω	
Connectors	IN: 1 × 4-point SpeakON®	LINK: 1 × 4-point SpeakON®
Rigging components	Integrated pole-mount socket Captive coupling bars Handles integrated into the cabinet	

Dimensions

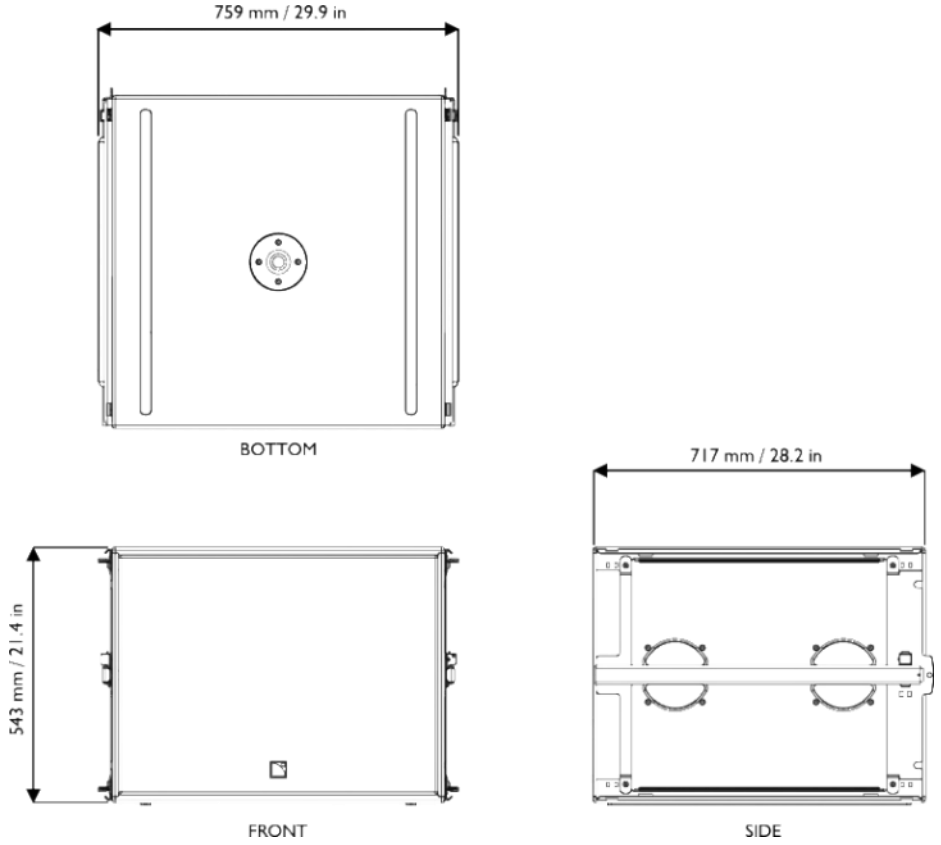

Physical data	Weight (net):	62 kg / 137 lb
	Cabinet:	Baltic birch plywood
	Finish:	Dark Grey brown (Pantone 426C) Pure white (RAL 9010®) Custom RAL code on special order
	Front:	Steel grill with anti-corrosion coating Airnet® acoustically neutral fabric
	Rigging components:	Steel with anti-corrosion coating

[1] Peak level measured at 1 m under half-space conditions using pink noise with crest factor 4 (preset specified in brackets).

L-Acoustics, an L-Group Company
13 rue Levacher Cintrat – 91460 Marcoussis – France
+33 1 69 63 69 63 – info@l-acoustics.com
www.l-acoustics.com

L-Acoustics GmbH
Steiermärker Str. 3-5
70469 Stuttgart
Germany
+49 7 11 89660 323

L-Acoustics Ltd.
PO. Box Adler Shine - Aston House
Cornwall Avenue - London N3 1LF
United Kingdom
+44 7224 11 234

L-Acoustics Inc.
2645 Townsgate Road, Suite 600
Westlake Village, CA 91361
USA
+1 805 604 0577

L-GROUP

www.l-group.com